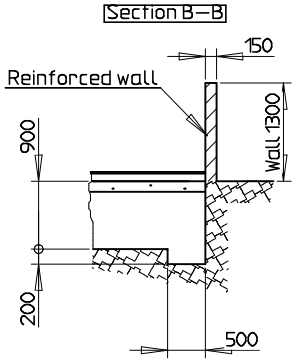

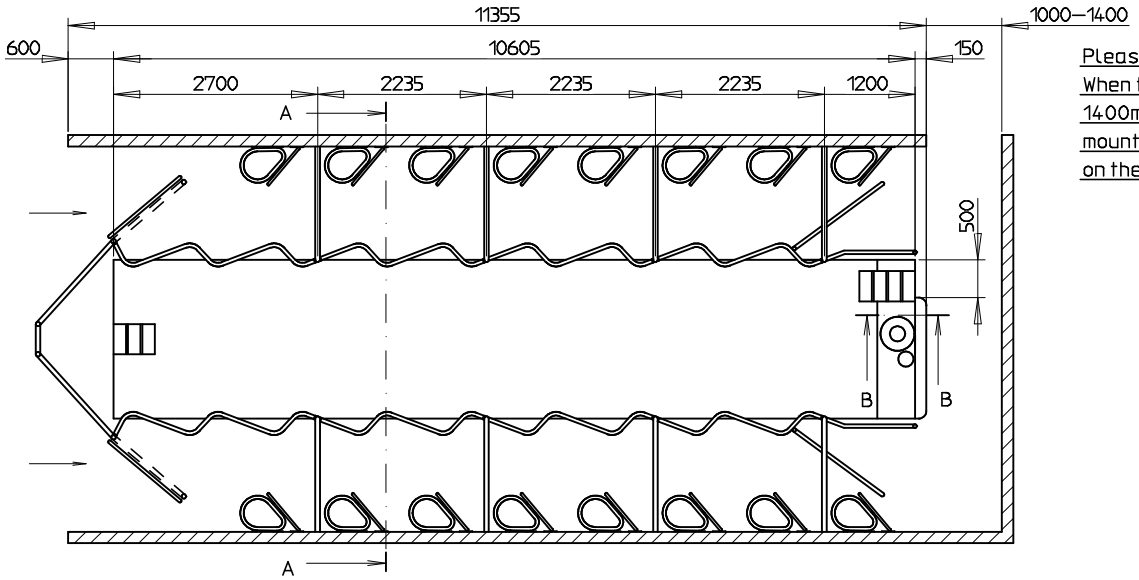

Please note:
When the distance is 1400mm, you have to mount spacer brace on the wall.

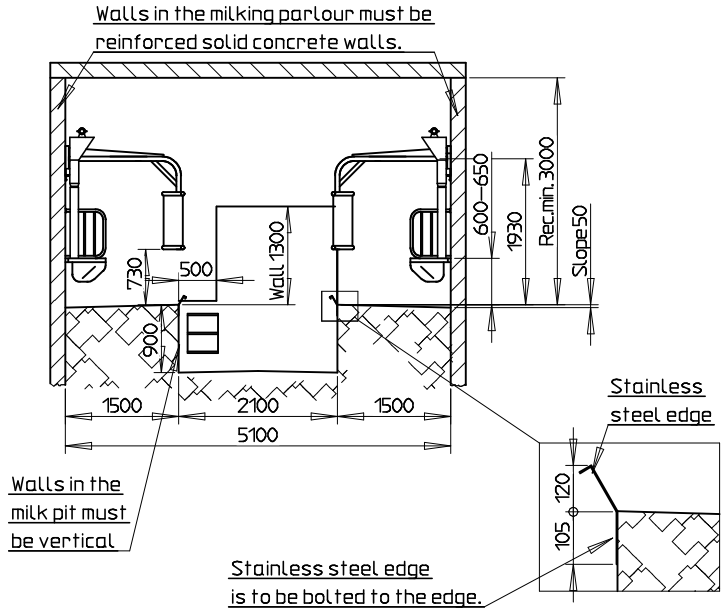

Please note!
Ventilation:
During building up there must be provided the necessary ventilation to prevent condensed water in the milking parlour.

The walls of the milking Parlour, on which you mount the stall construction must be flat. No posts, rafters etc. are allowed as they might obstruct to the cows.

All measures in mm

STRANGKO A/S HORNE, DK-6800 VARDE TLF. +4575260211				Tolerance:	Overflade:	Målestok: 1:0:50.0	Vægt:	
						Materiale:		
						Dimension:		
						Beskrivelse: Milking Parlour 2x8 Extra with feedtrough		
					Dato	Navn		
				Tegn.	20.10.00	jla	Tegningsnummer: 02 208 023 01	Side: 1
				Kont.				
A	Div.ændr.	28.04.04	jla	Afd.				
Rev.	Rettelse	Dato	Navn	Original:			Erst. f.:	Bestnavn: