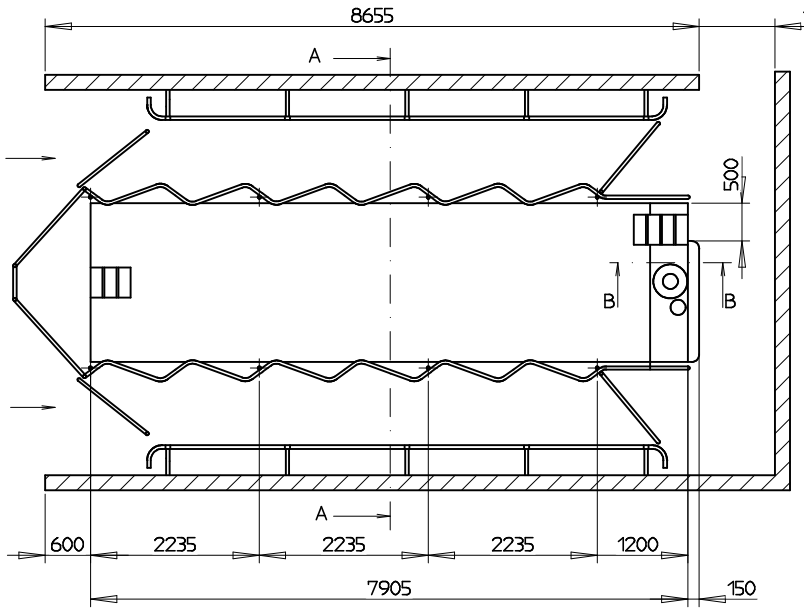

Please note:
When the distance is 1400mm, you have to mount spacer brace on the wall.

Section A–A

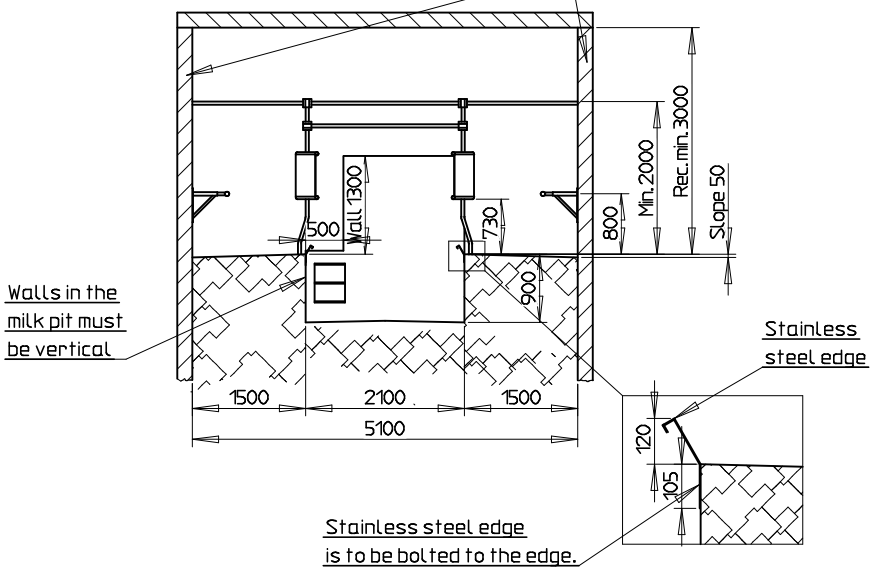

Section B–B

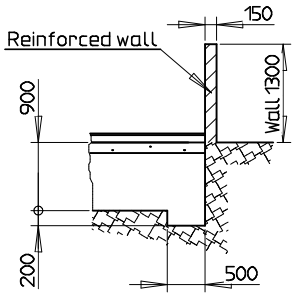

Please note!
Ventilation:
During building up there must be provided the necessary ventilation to prevent condensed water in the milking parlour.

The walls of the milking Parlour, on which you mount the stall construction must be flat. No posts, rafters etc. are allowed as they might obstruct to the cows.

All measures in mm

STRANGKO A/S HORNE, DK-6800 VARDE TLF. +4575260211				Tolerance:		Overflade:	Målestok: 1.0:50.0		Vægt:
							Materiale:		
							Dimension:		
							Beskrivelse: Milking Parlour 2x6 Std.		
					Dato	Navn			
C	Opdateret tegning	24.08.04	jla	Tegn.	17.10.00	jla	Tegningsnummer: 01 206 019 01		Side: 1
B	Opdateret tegning	31.10.03	kgm	Kont.					
A	Opdateret tegning	19.10.00	jla	Afd.					
Rev.	Rettelse	Dato	Navn	Original:			Erst. f.:	Erstat af:	